LINK
HORIZONTAL WITH GRID

Project name:

Type:

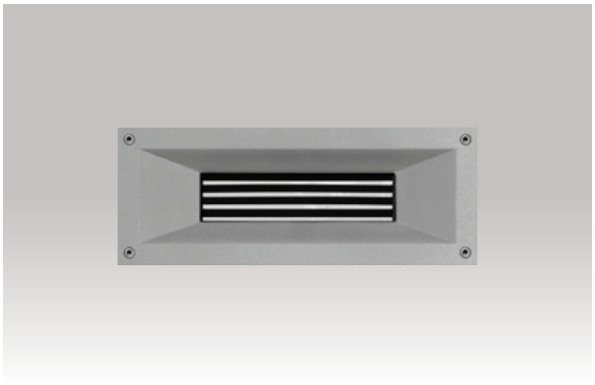

Wall recessed luminaire designed with clean cut lines that makes it suitable for passageways ans strairs or wherever a soft and discrete illumination is required. The black anti-glare grid direct the lights downwards avoiding light pollution and the direct exposure of the light source, providing excellent visual comfort.

Luminaire characteristics:
Power input: 12.2W
Lumens: 57lm (delivered for 3000K)
Luminaire efficacy: 4lm/W (3000K)

Source: LED module (LM-80 tested)
3000K : 90CRI,
4000K : 90CRI.
Lumen maintenance: 70% of initial lumens at >50 000 hours (L70), (LM79 tested).

Optics: Accent light

Mounting: Recessed wall installation using back box accessory

Material:
Body: Die-cast aluminum
Reflector: 99.98% pure anodized aluminum
Diffuser: Acid-etched tempered glass and black anti-glare grid
Hardware: Stainless steel screws and silicone gaskets

Electrical: Integral high efficiency electronic power supply, rated at 50 000 hours, 120V.

Finish: Aluminum gray

Weight: 3.3lbs (1.5kg).

Warranty: 5 year limited warranty.

Certification: cULus for wet location.

Ratings: IP65, IK06

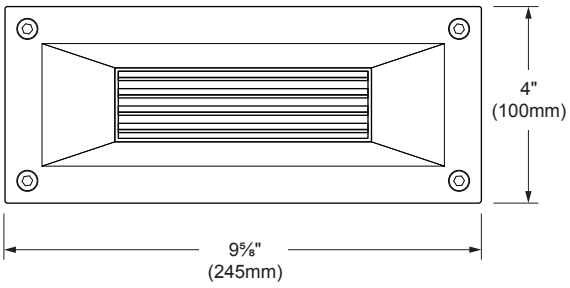

FRONT VIEW

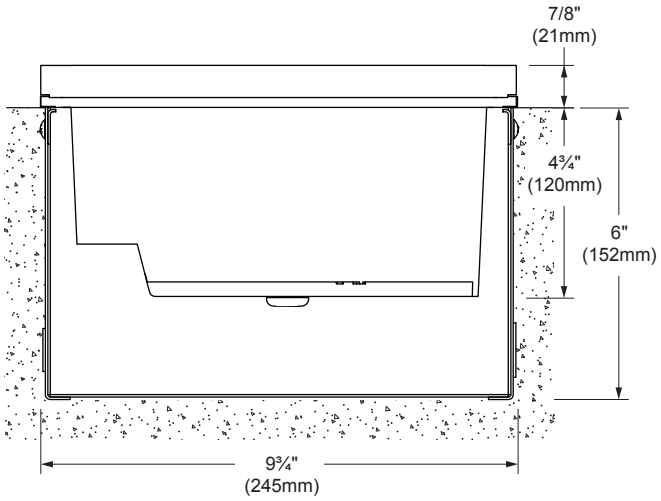

SECTION VIEW

SISTEMALUX

9320 Boul. St-Laurent, suite 100, Montréal (Québec) Canada H2N 1N7
P.: 514.523.1339 F.: 514.525.6107 www.sistemalux.com

TECHNICAL DATA

LOAD (W)	CCT (K)	CRI	OPTIC	DELIVERED LUMENS (lm)	LUMINAIRE EFFICACY (lm / w)	CENTER BEAM CANDLE POWER (cd)	MODEL
12.2W	3000K	90	Accent light	57	4	58	S.4681W

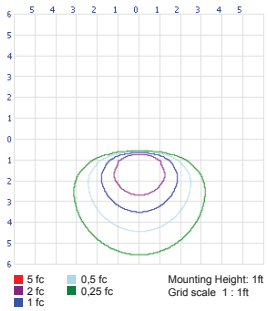

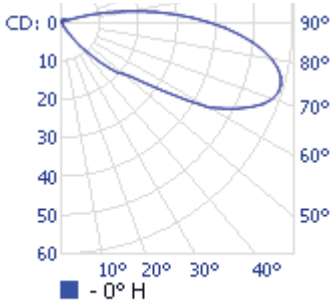

3000K - 90 CRI - Accent light

ACCESSORY (TO BE ORDERED SEPARATELY)

◯ **S.4683A -** Recessed back box
Dim: 9¾" x 3⅞" x 6"
Dim: 245mm x 98mm x 152mm

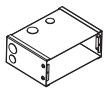

RESET

ORDERING INFO

- **120** **-** **14**
MODEL | VOLTAGE | FINISH

MODEL
◯ **S.4681W -** 3000K
◯ **S.4681N -** 4000K

VOLTAGE
● **120 -** 120V

FINISH
● **14 -** Aluminum gray

SISTEMALUX

9320 Boul. St-Laurent, suite 100, Montréal (Québec) Canada H2N 1N7
P.: 514.523.1339 F.: 514.525.6107 www.sistemalux.com